victoria + albert®

Kit 17 K-17-xx

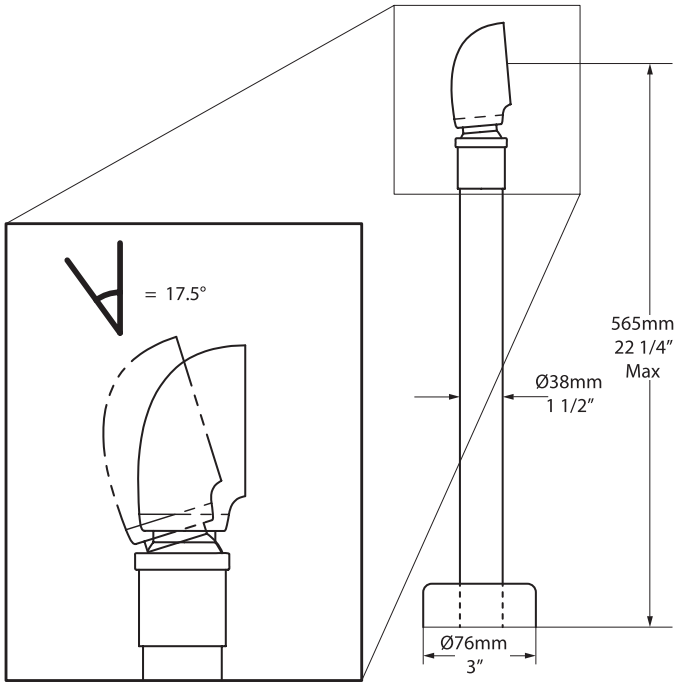

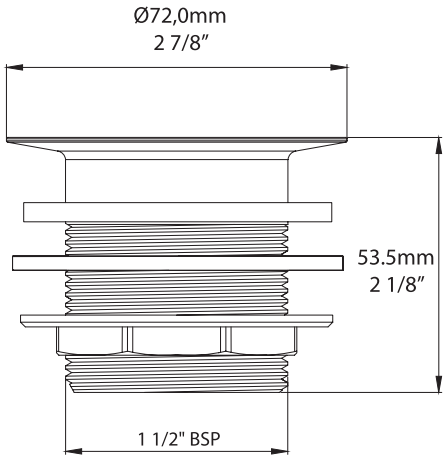

*All measurements subject to +/-5% tolerance

- **K-17-PC** Polished Chrome, Chrom Poliert, Chrome Poli, Cromado brillante, Cromo Lucidato
- **K-17-PN** Polished Nickel, Nickel Poliert, Nickel Poli, Níquel Brillante, Nickel Lucidato
- **K-17-PB** Polished Brass, Messing Poliert, Laiton Poli, Latón Pulido, Ottone Lucidato
- **K-17-BN** Brushed Nickel, Nickel Gebürstet, Nickel Brossé, Níquel Satinado, Nickel Spazzolato

- Exposed overflow bath waste kit with flush fitting coin flip drain. For baths without a pre-drilled overflow. Please note, overflow will need to be drilled for installation.
- Suits the Amalfi, Amiata 1500, Amiata 1650, Barcelona Classic, Barcelona 1500, Barcelona 1700, Barcelona 1800, Cabrits, Ios, Mozzano, Mozzano 2, Napoli, Pescadero, Taizu, Terrassa, Toulouse 1500, Toulouse 1800, Vetralla 1500 and Vetralla 1650 baths.

5 years

Guaranteed for residential use for 5 years
5 Jahre Garantie bei privater Nutzung
5 ans de garantie pour un usage domestique
Garantía de 5 años para uso domestico
La sicurezza garantita per uso residenziale per 5 anni

ATS 5200.040
WM-022679